VCU 2/24 to Contactor Box Wiring Diagram - (1) Heater and (1) Fan

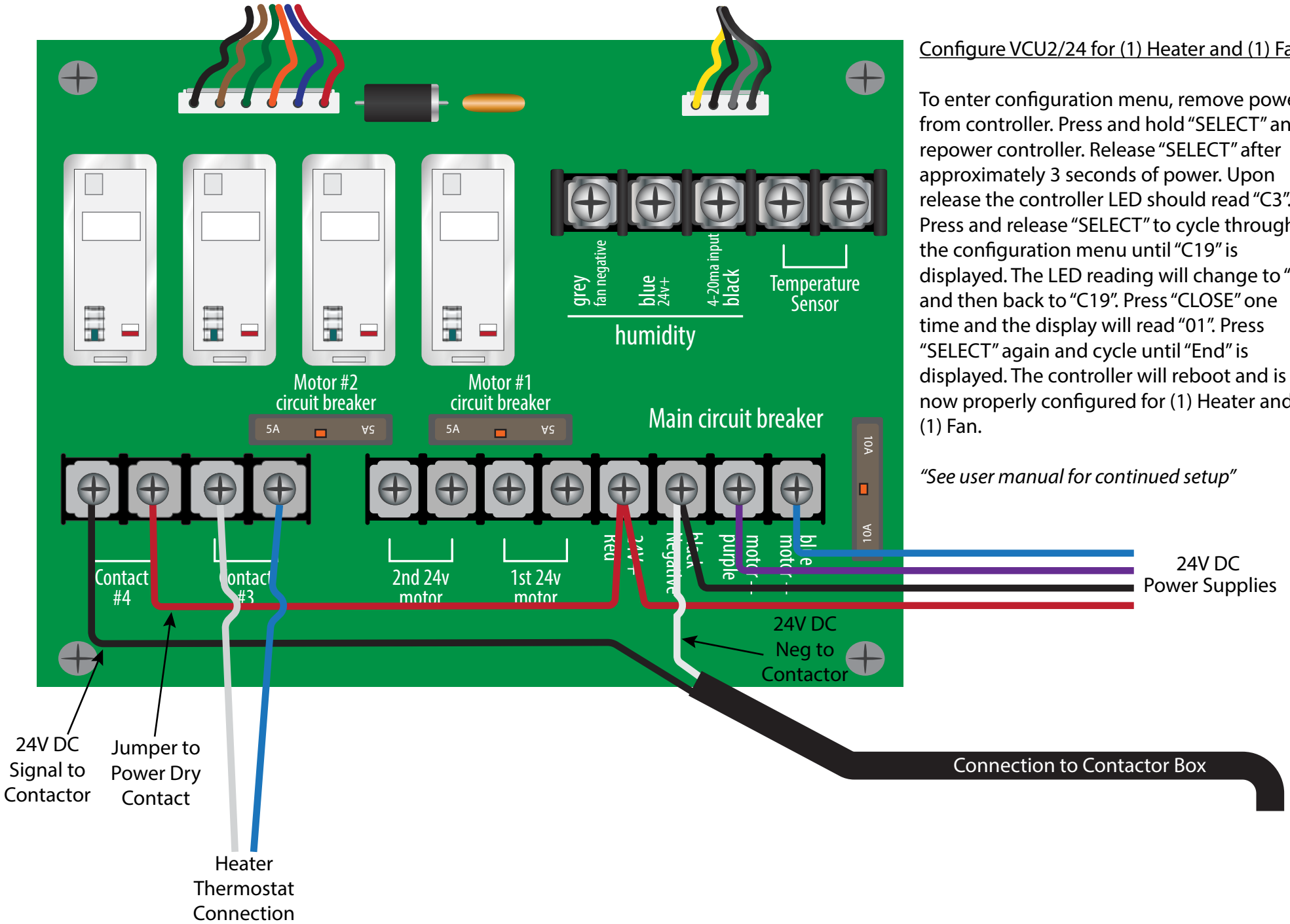

Configure VCU2/24 for (1) Heater and (1) Fan

To enter configuration menu, remove power from controller. Press and hold "SELECT" and repower controller. Release "SELECT" after approximately 3 seconds of power. Upon release the controller LED should read "C3". Press and release "SELECT" to cycle through the configuration menu until "C19" is displayed. The LED reading will change to "02" and then back to "C19". Press "CLOSE" one time and the display will read "01". Press "SELECT" again and cycle until "End" is displayed. The controller will reboot and is now properly configured for (1) Heater and (1) Fan.

"See user manual for continued setup"